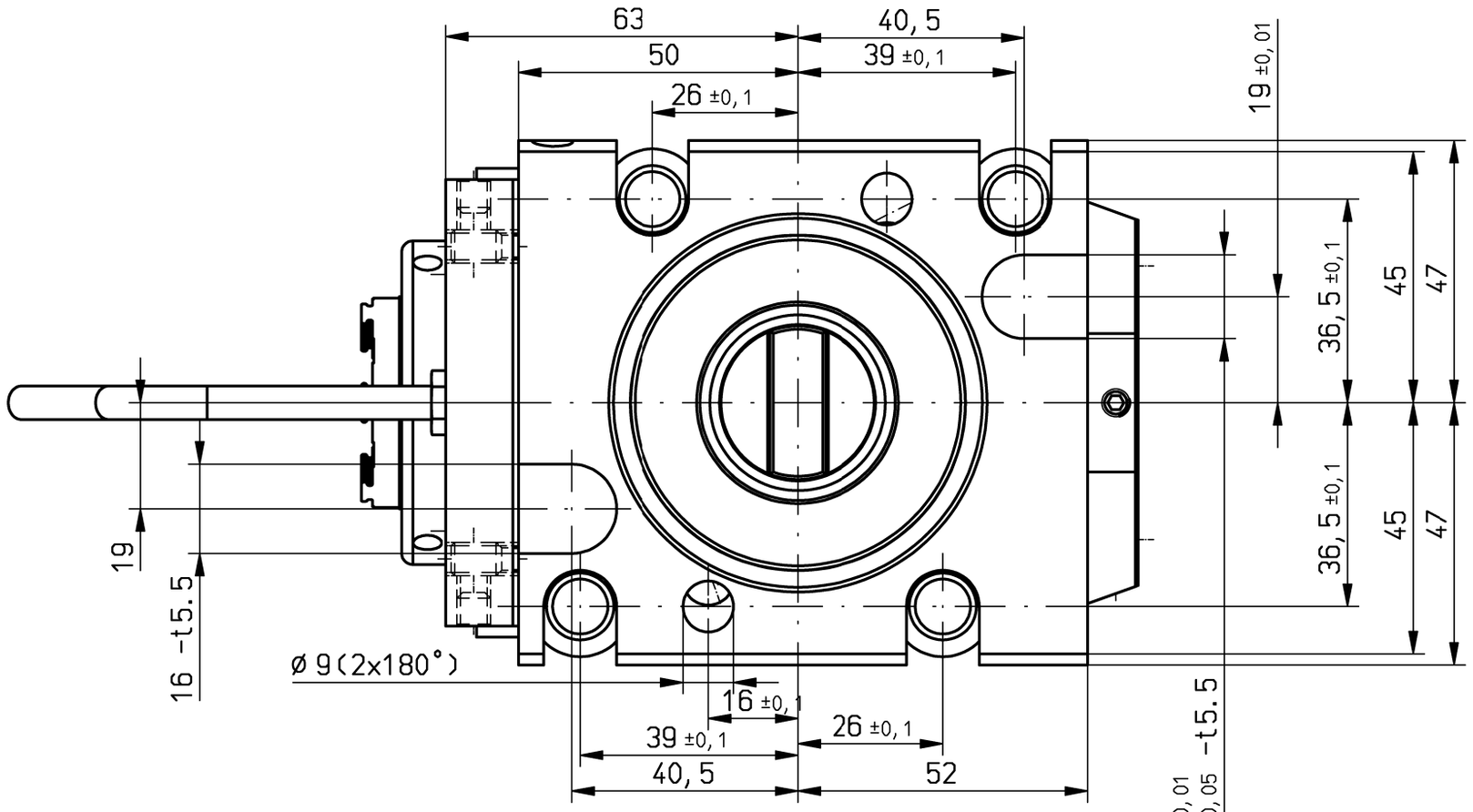

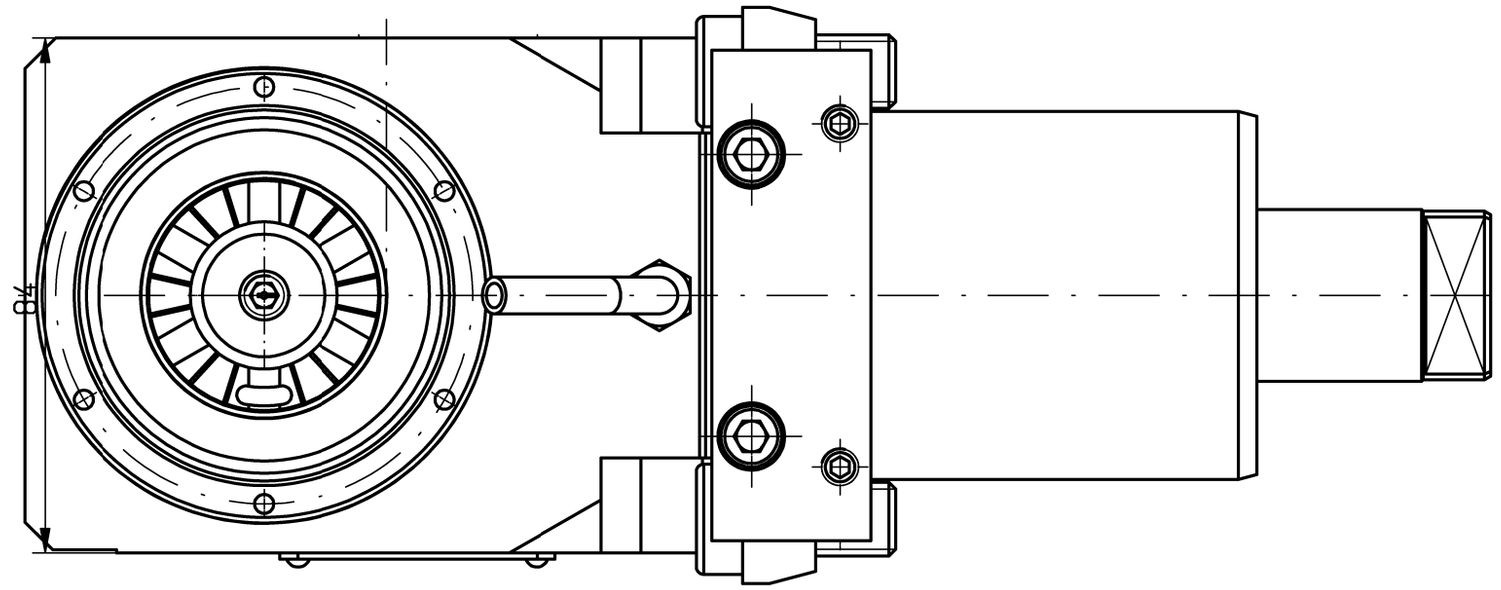

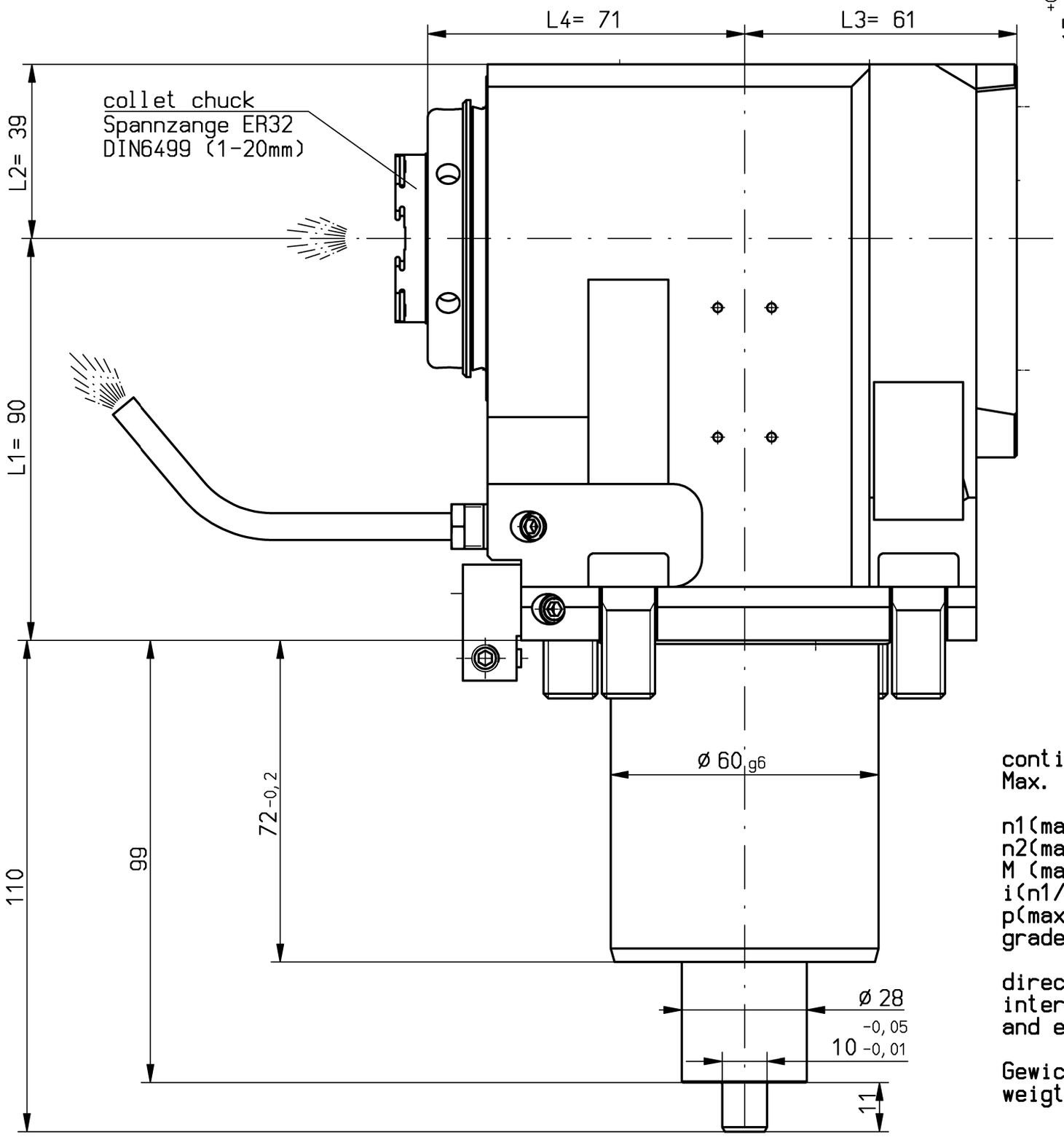

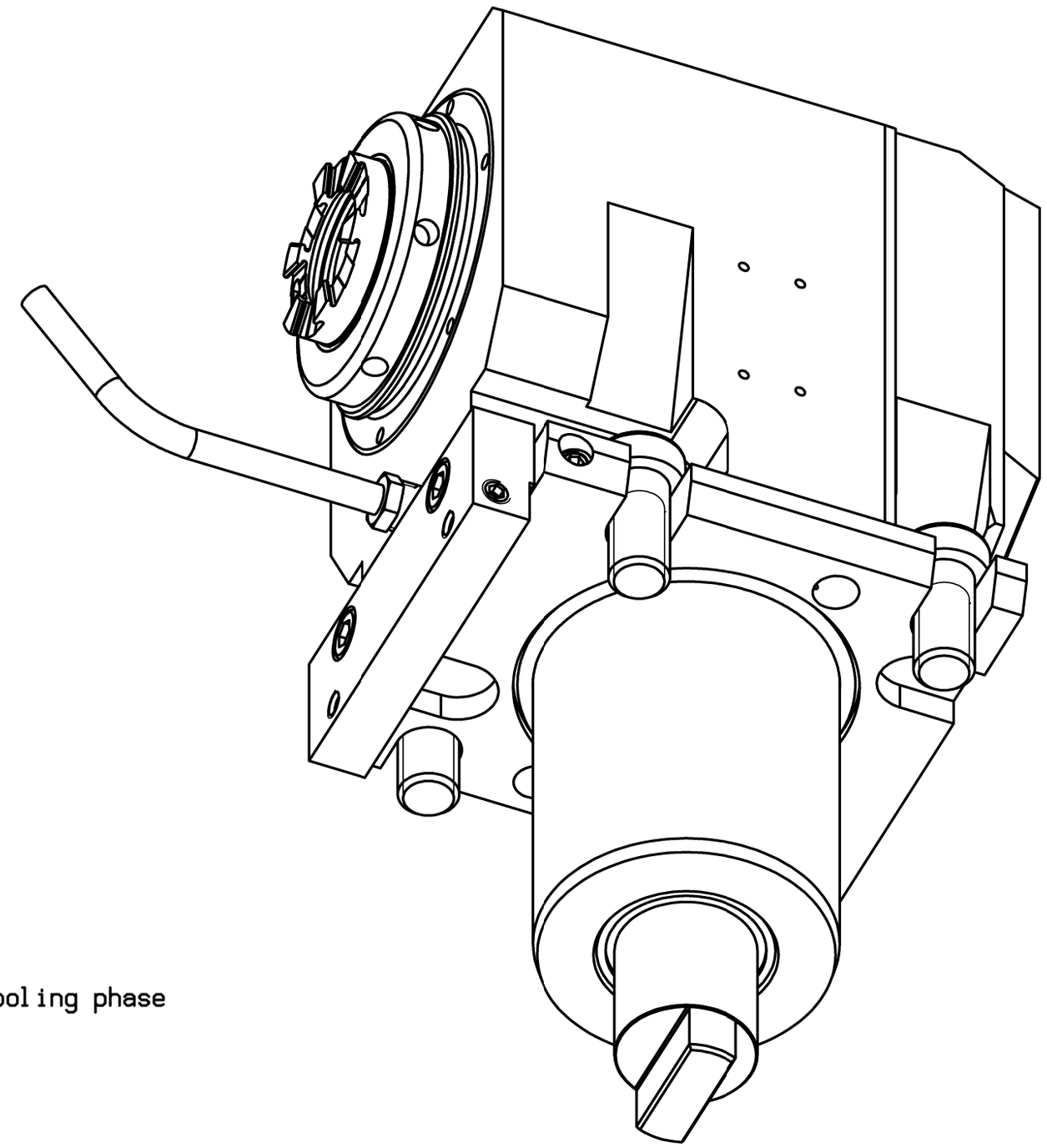

continuous dry run possible with sufficient cooling phase
Max. tool temperature 90°C.

n1(max) = 6 500 rpm
n2(max) = 6 500 rpm
M (max) = 50 Nm
i(n1/n2) = 1 : 1
p(max) = 70bar
grade of filtration: max. 0,05mm

direction of rotation not reversal
internal coolant supply through the spindle
and external coolant supply through pipes

Gewicht ca. 15kg
weigth around 15kg

A196006	ID-Nr.			Allg.Tol. ISO 2768-m 20.01.2020	ZWN-BL	Maßstab 1:1	
	manuelle Änderung					Werkstoff: Maßblatt	
					Datum / Name	mimatic® Tool Systems	
				Bearb.	20.01.2020 Ess	mimatic 87488 Betzigau – Westendstraße 3	
				Gepr.	20.01.2020 Ess	GmbH Tel.: 0831/57444-0 Fax.: -90	
				F/M/Q			
				CAD: C:00156634.SZA			
				Zeichnungs-Nr.: 00056705		AGW-OK-C-60-ER32-I 1:1 L=90 S1=110 LT3000 16x	Blatt Bl.
Zust.	Änderung	Datum	Name	Urspr. 00035518		Ers. f.:	Ers. d.: Plotserver