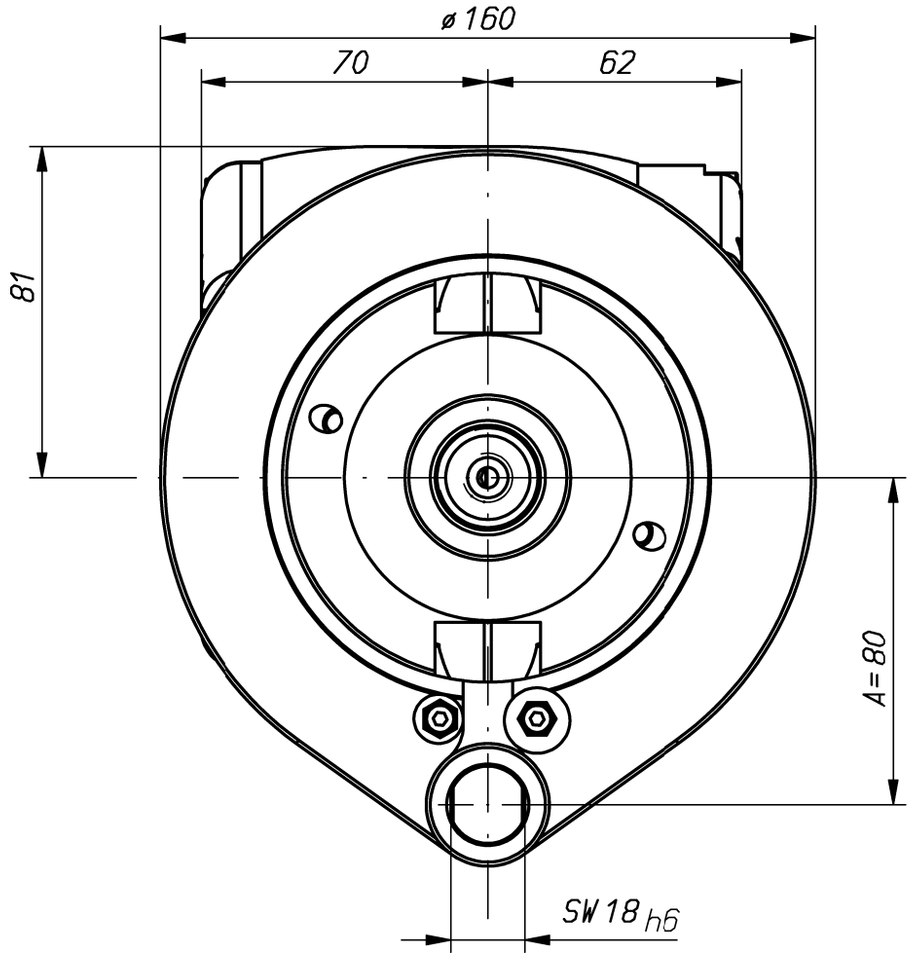

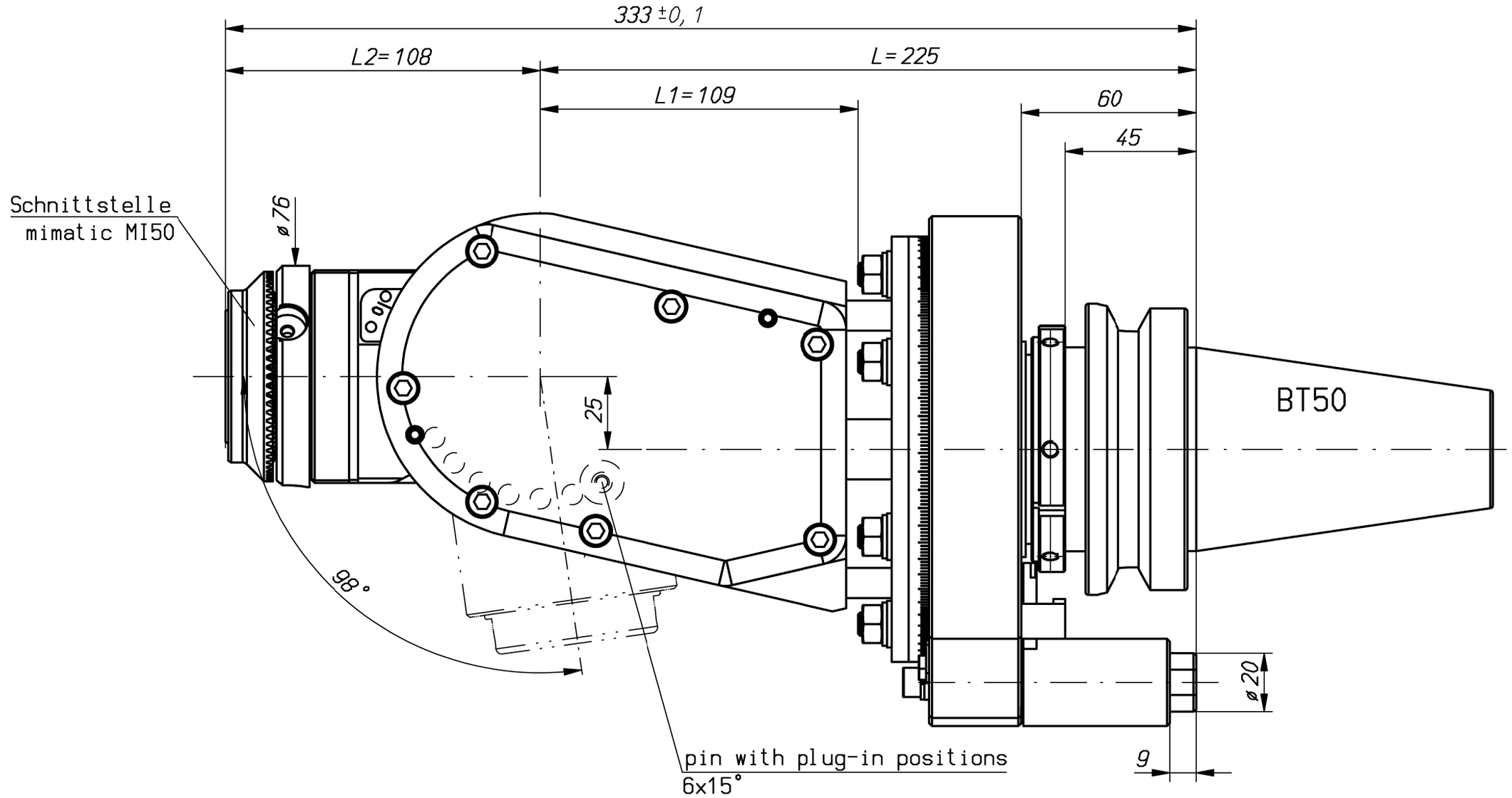

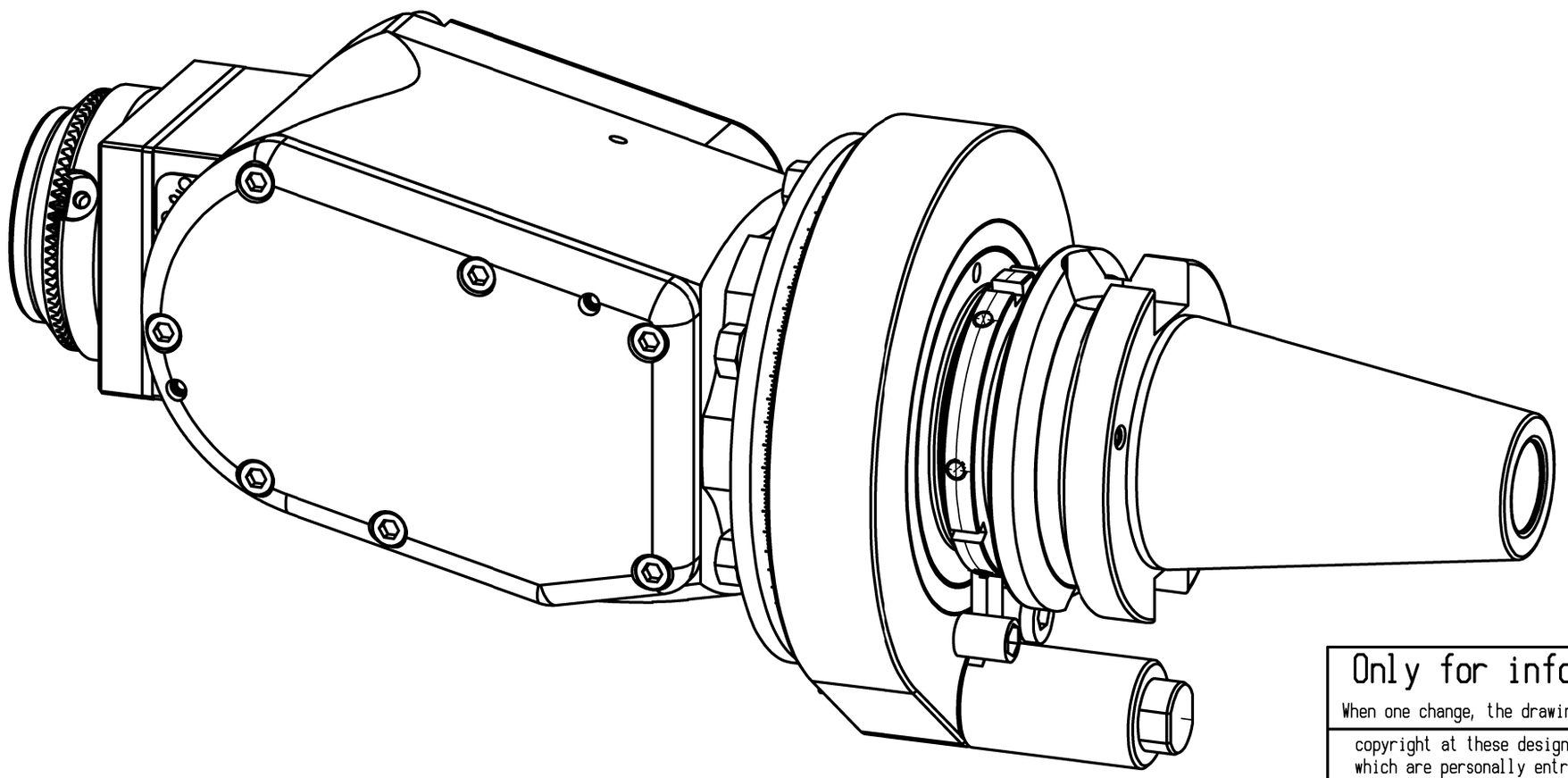

n1(max) = 6000 U/min
n2(max) = 6000 U/min
M (max) = 70 Nm
i(n1/n2) = 1 : 1

p(max) = 70bar

keine Kühlmittelzufuhr
no coolant supply

keine Drehrichtungsumkehr
direction of rotation not reversal

Gewicht ca. 15,0 kg
weight around 15,0 kg

Kopf 360° drehbar
head 360° adjustable

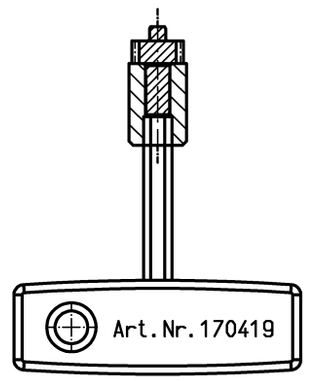

Only for information !

When one change, the drawing does not interchange

copyright at these designs and all supplements which are personally entrustet to the receiver remain at any time to our company.
Without our written permission they may not be copied or multiplatet. Also never third bersons to be communicatet or made accesible
Fa. mimatic-Zettl GmbH

A162988			ID-Nr.	Allg.Tol. ISO 2768-m 24.11.2014	ZWN-BL	Maßstab 1:1.5	
	manuelle Änderung					Werkstoff: Maßblatt	
					Datum / Name		
				Bearb.	24.11.2014 Krapp	mimatic® Tool Systems	
				Gepr.	24.11.2014 Krapp		
				Norm		mimatic GmbH 87488 Betzigau – Westendstraße 3	
				CAD: C:00109489.SZA		Tel.:0831/57444-0 Fax.:-90	
				Zeichnungs-Nr.: 00046678		WK-WS7-BT50-MI50-0	Blatt
						1:1 L225 L1=109 0-98°	Bl.
Zust.	Änderung	Datum	Name	Urspr. 00030310		Ers. f.:	Ers. d.: Plotserver