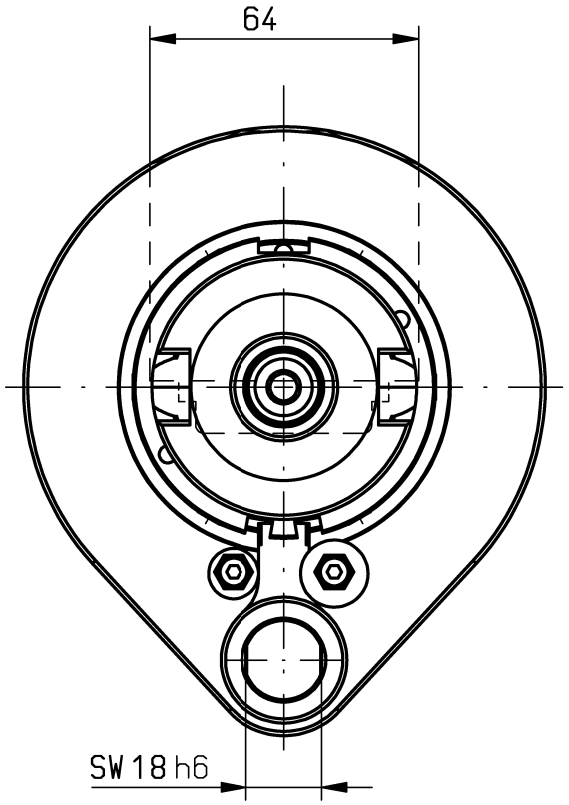

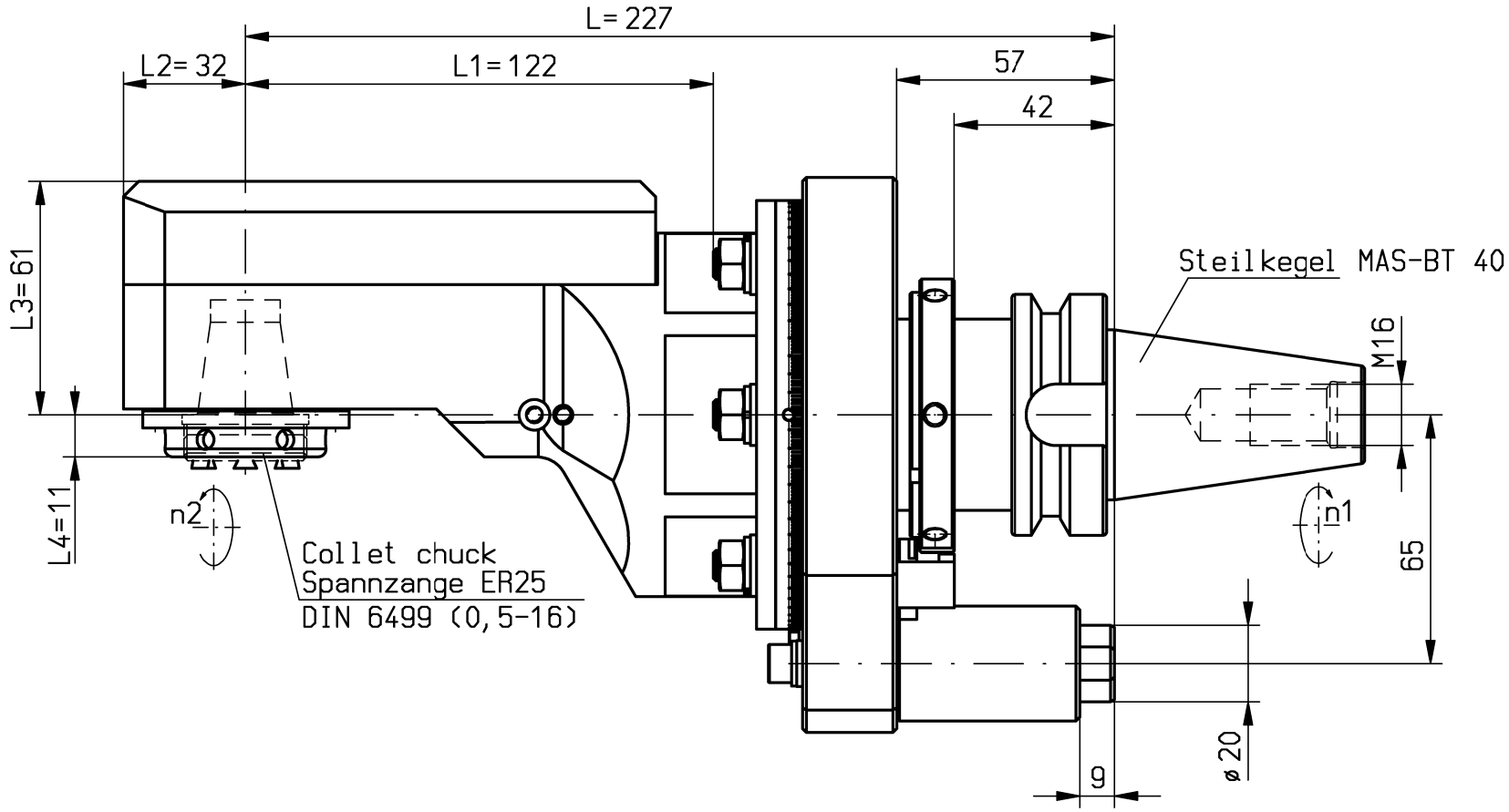

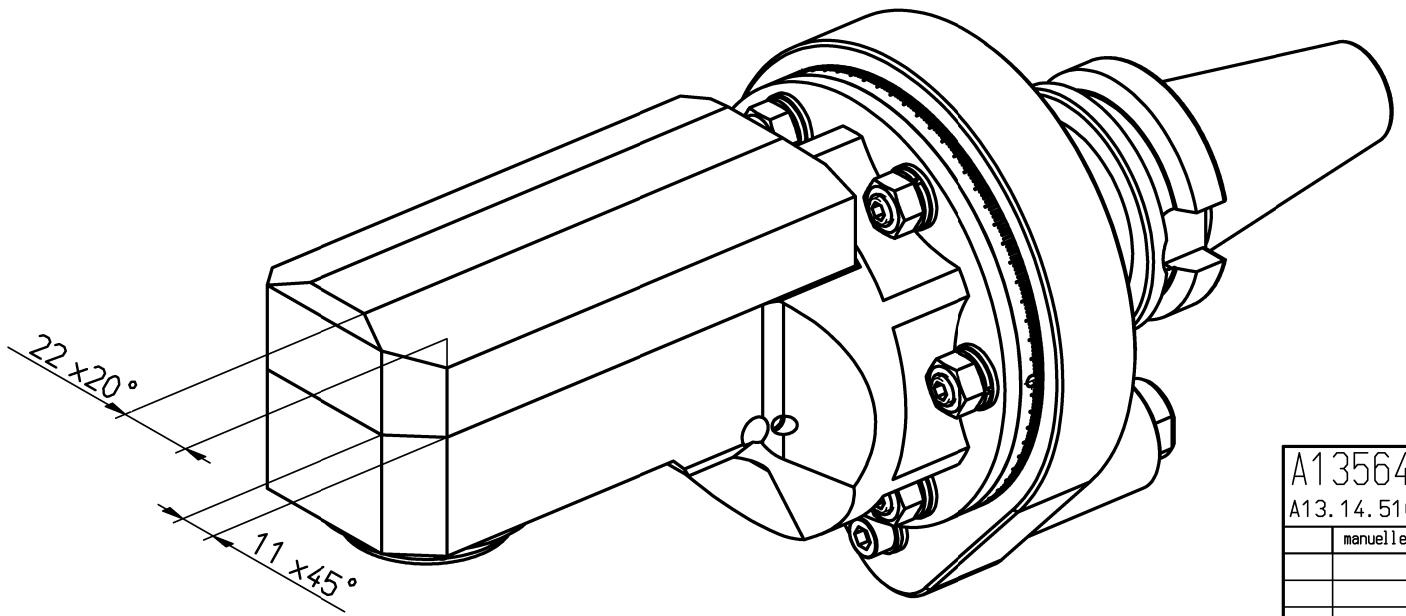

n1(max) = 8000 U/min
n2(max) = 6400 U/min
M (max ab) = 35 Nm
i(n1/n2) = 1,25 : 1

kein Kühlmittel
no coolant

Kopf 360° drehbar
head 360° adjustable

Drehrichtungsumkehr
direction of rotation reversal

Gewicht ca. 7kg
weight around 7kg

A135649 ID-Nr.				Allg. Tol.	ZWN-Bl.	Maßstab 1:1.5	
A13.14.510.06.001				ISO 2768-mK		Werkstoff:	
	manuelle Änderung			27.11.2024		Maßblatt	
					Datum / Name	mimatic® Tool Systems	
				Bearb.	26.11.2024 / Kropp	mimatic 87488 Betzigau – Westendstraße 3	
				Gepr.	27.11.2024 / Kropp	GmbH Tel.: 0831/57444-0 Fax.: -90	
				F/M/Q			
				CAD: C:00186346.SZA			
				Zeichnungs-Nr.: 00063953		WK-ZWS5-BT40-ER25-0	Blatt
						L3=61	Bl.
Zust.	Änderung	Datum	Name	Urspr. 00022554		Ers. f.:	Ers. d.: Plotserver

It is strictly prohibited to copy, reproduce or develop these drawings to third persons without having our written permission. A copyright violation involves a claim for damages and is indictable if it is premediative done. - Only for Information. Will not be replaced if changed!