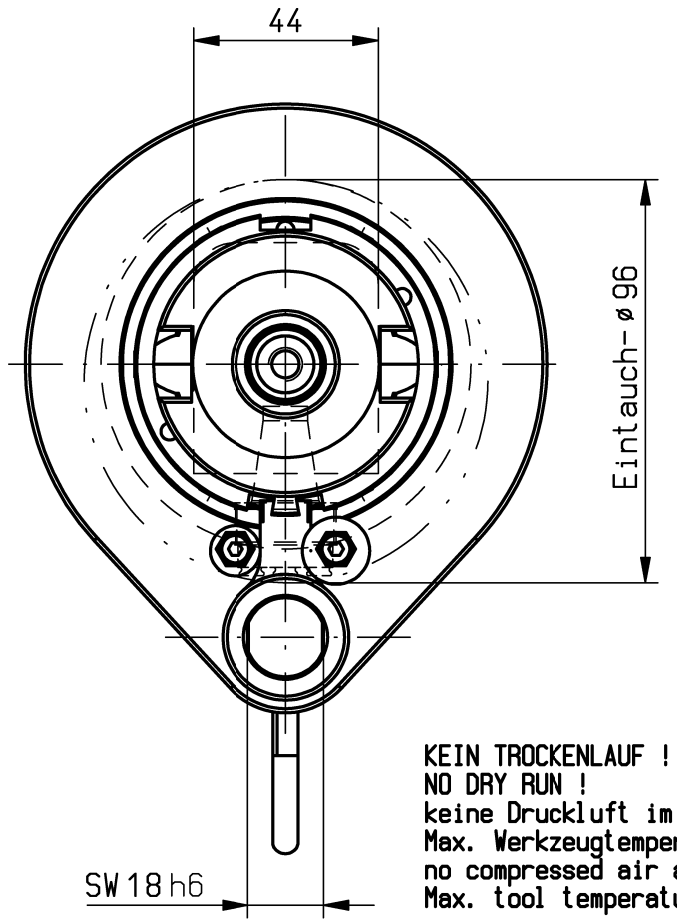


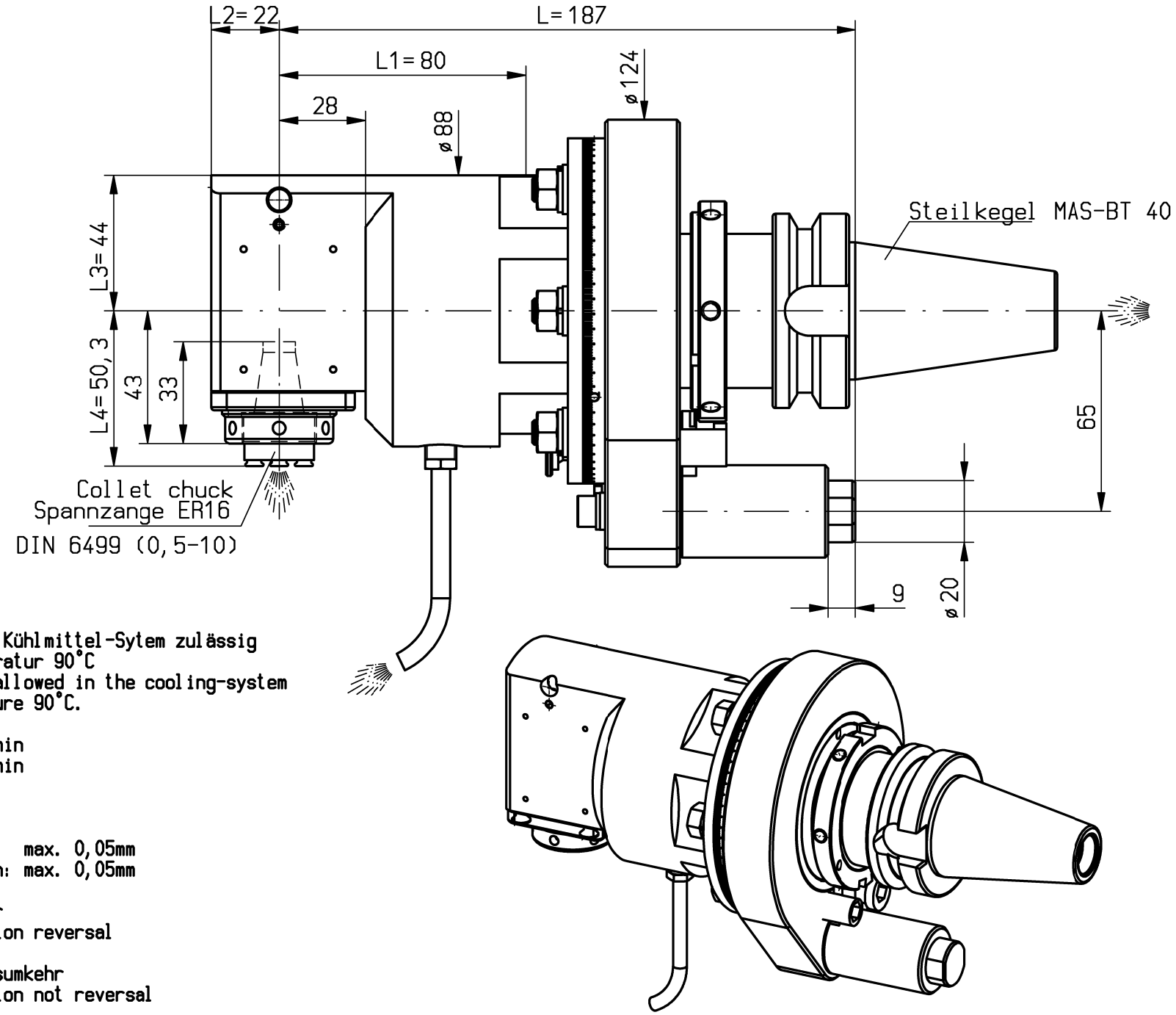


KEIN TROCKENLAUF !
NO DRY RUN !
keine Druckluft im Kühlmittel-Sytem zulässig
Max. Werkzeugtemperatur 90°C
no compressed air allowed in the cooling-system
Max. tool temperature 90°C.

n(max) = 10000 U/min
n(max) = 10000 U/min
M (max) = 12 Nm
i(n1/n2) = 1 : 1
p(max) = 70bar
Filterfeinheit: max. 0,05mm
grade of filtration: max. 0,05mm

Drehrichtungsumkehr
direction of rotation reversal

keine Drehrichtungsumkehr
direction of rotation not reversal

Kühlmittelzufuhr i.K durch die Spindel
und e.K. über Spritzrohr
internal coolant supply through spindle
and external through pipe

Kopf 360° drehbar
head 360° adjustable

Gewicht ca. 6kg
weight around 6kg

| | | | | | | | |
|---|---|---|---|---|---|---|---|
| A135451 | | | ID-Nr. | Allg.Tol. ISO 2768-mK | ZWN-Bl. | Maßstab 1:1.5 | 70100716 |
| A13.13.112.06.001 | | | | 02.11.2023 | | Werkstoff: Maßblatt | |
| | manuelle Änderung | | | | Datum | Name | mimatic® Tool Systems |
| | | | | Bearb. | 05.03.2007 | Gessner | mimatic GmbH 87488 Betzigau – Westendstraße 3 |
| | | | | Gepr. | 18.01.2010 | Dietrich | Tel.: 0831/57444-0 Fax.: -90 |
| | | | | F/M/Q | | | |
| | | | | CAD: C:00045129.SZA | | | |
| | | | | Zeichnungs-Nr.: 00025335 | | WK-SW1-BT40-ER16-I | Blatt Bl. |
| Zust. | Änderung | Datum | Name | Urspr. 00025288/00024795 | | Ers. f.: | Ers. d.: Plotserver |

It is strictly prohibited to copy, reproduce or develop these drawings to third persons without having our written permission. A copyright violation involves a claim for damages and is indictable if it is premediative done. - Only for Information. Will not be replaced if changed!